Bore Gages

SERIES 526 — for Extra Small Holes

These bore gages measure diameters of small holes. The radial displacement of split-ball contact is converted to axial displacement of measuring rod, which is shown on the dial indicator.

FEATURES

- Optional stand (**215-120-10**) is available for efficient measurement of multiple small holes.

SPECIFICATIONS

Metric Gage Stem ø 8mm

Measuring Range	**Order No. Without Dial Gage**	**Order No.** With **2046SB** Graduation 0.01mm	**Order No.** With **2109SB-10** Graduation 0.001mm	Number of Anvils	Number of Needles	Probe depth (D)	Setting Rings
0.95-1.55mm	**526-170-10***	**526-173-10**	**526-172-10**	5	1	11.5mm	-
0.95-1.55mm	**526-170-11***	**526-173-11**	**526-172-11**	5	1	11.5mm	5
1.5-3.95mm	**526-160-10***	**526-163-10**	**526-162-10**	9	2	17.5,22.5mm	-
1.5-3.95mm	**526-160-11***	**526-163-11**	**526-162-11**	9	2	17.5,22.5mm	9
3.7-7.3mm	**526-150-10***	**526-153-10**	**526-152-10**	7	1	32mm	-
3.7-7.3mm	**526-150-11***	**526-153-11**	**526-152-11**	7	1	32mm	7
7 - 10mm	**526-101***	**526-126**	**526-124**	6	1	56mm	
10 - 18mm	**526-102***	**526-127**	**526-125**	8	1	62mm	

*Does not come with Dial Gage Protector (21DZA000)

Inch Gage Stem Dia .375"

Measuring Range	**Order No. Without Dial Gage**	**Order No.** With **2922SB** Graduation .0005"	**Order No.** With **2923SB-10** Graduation .0001"	Number of Anvils	Number of Needles	Probe depth (D)	Setting Rings
.037-.061"	**526-175-10***	-	**526-176-10**	5	1	.453"	-
.037-.061"	**526-175-11***	-	**526-176-11**	5	1	.453"	5
.059-.156"	**526-165-10***	-	**526-166-10**	9	2	.689,.886"	-
.059-.156"	**526-165-11***	-	**526-166-11**	9	2	.689,.886"	9
.146-.287"	**526-155-10***	-	**526-156-10**	7	1	1.26"	-
.146-.287"	**526-155-11***	-	**526-156-11**	7	1	1.26"	7
.3 - .4"	**526-103***	**526-119**	**526-122**	6	1	2.2"	
.4 - .7"	**526-104***	**526-120**	**526-123**	8	1	2.4"	

*Does not come with Dial Gage Protector (21DZA000)

DIMENSIONS

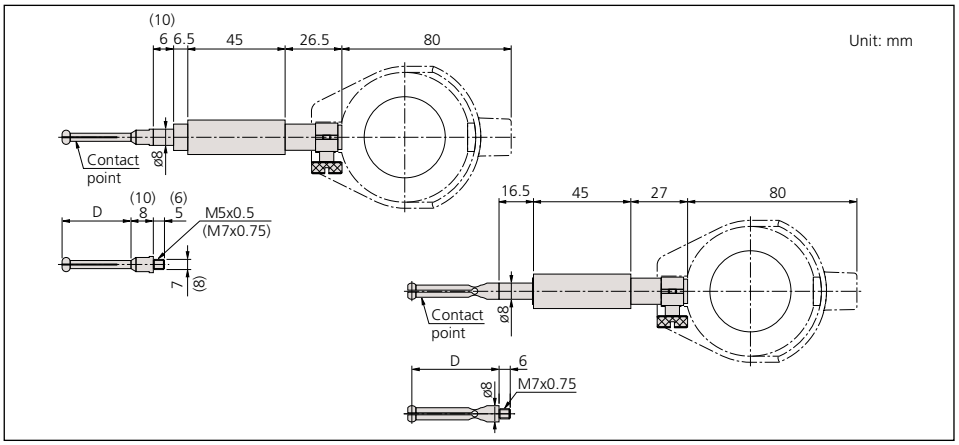

DIAL FACES

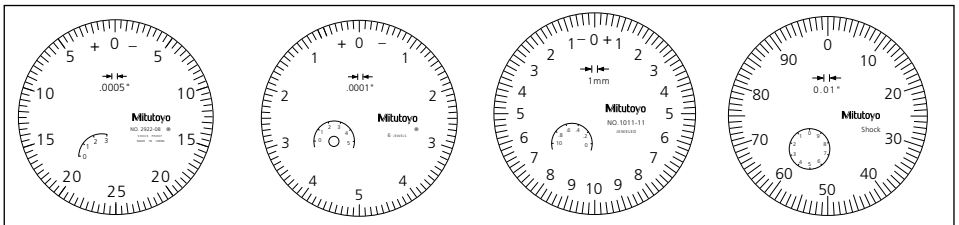

2922SB .0005" | **2923SB-10** .0001" | **2109SB-10** 0.001mm | **2046SB** 0.01mm

526-127

526-172

Technical Data

Accuracy: 4µm / .00016"
Indication stability: 2µm / .00008"
Graduation: 0.01mm, 0.001mm, .0005" or .00001"

Contact Point

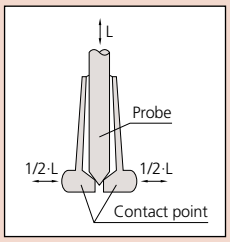

Optional Accessory

215-120-10: Bore gage stand

----: Setting ring (See page C-29.)